COAT HANGER + SHOE RACK

By Franson Silver Rock

DESIGN BRIEF

Our home entrance doesn't have any place to hang coats / store shoes. Adjacent to the entrance room is our dining room, which has a corner where we currently hang our coats on two little hooks. We are looking for a creative solution that a) will fit more coats/shoes b) stylistically fit within the dining room i/e so we don't feel like we are 'eating next to the shoe rack". There is also a heating pipe in the corner, so it needs to be built around it, so that it uses all the space between the wall and the window frame. Dimensions are in the Sizes Powerpoint.

'Elegant design, not too bulky'

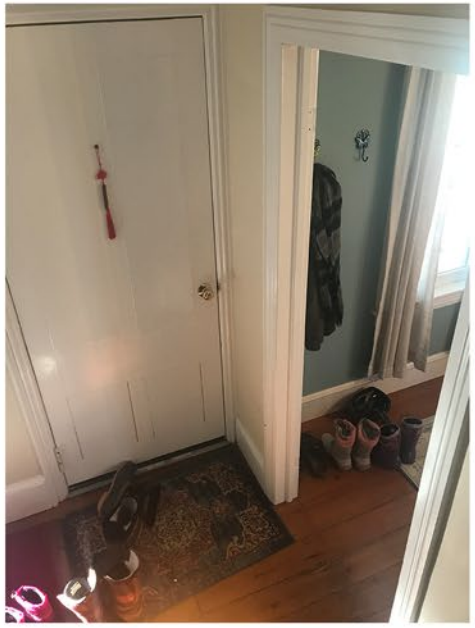

IDEATION SKETCHES

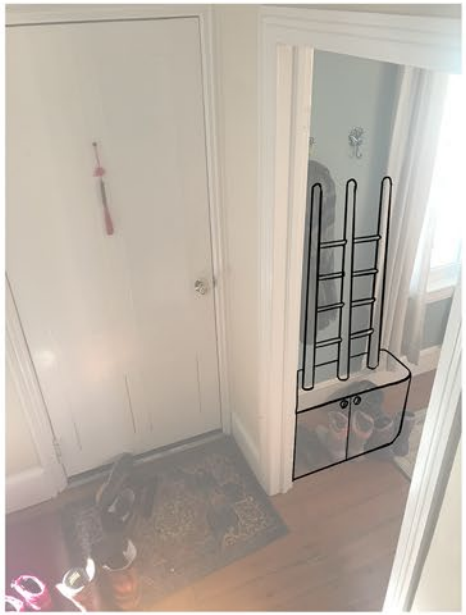

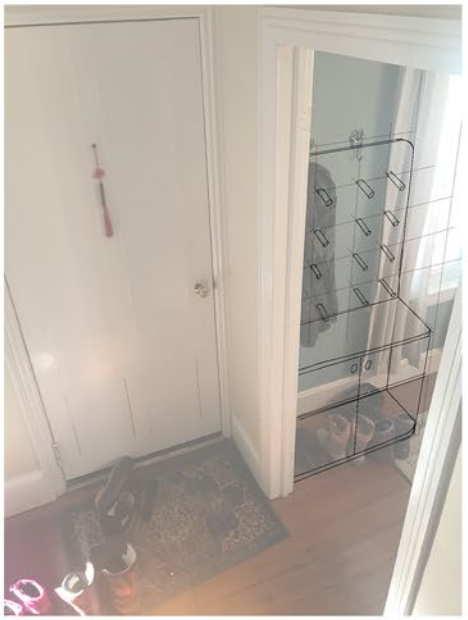

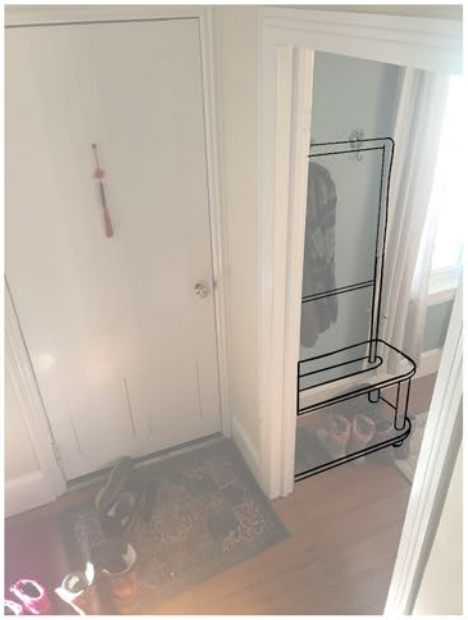

DIRECTION 1

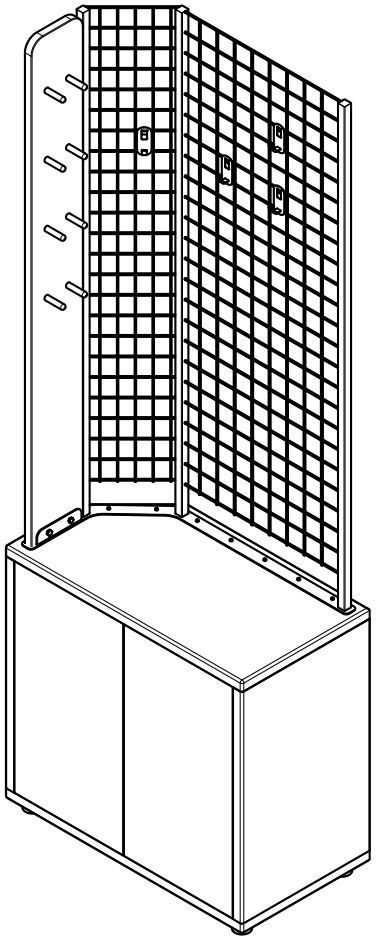

DIRECTION 2

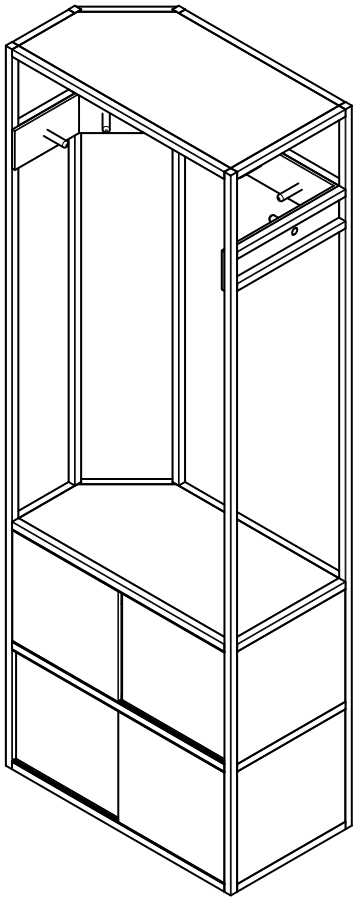

DIRECTION 3

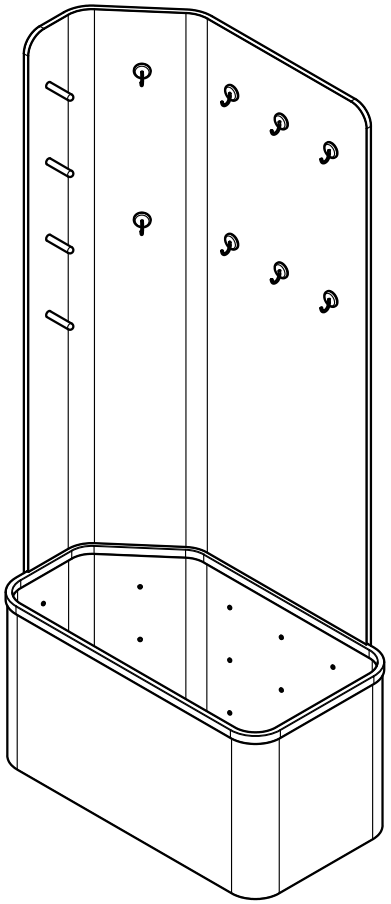

DIRECTION 1

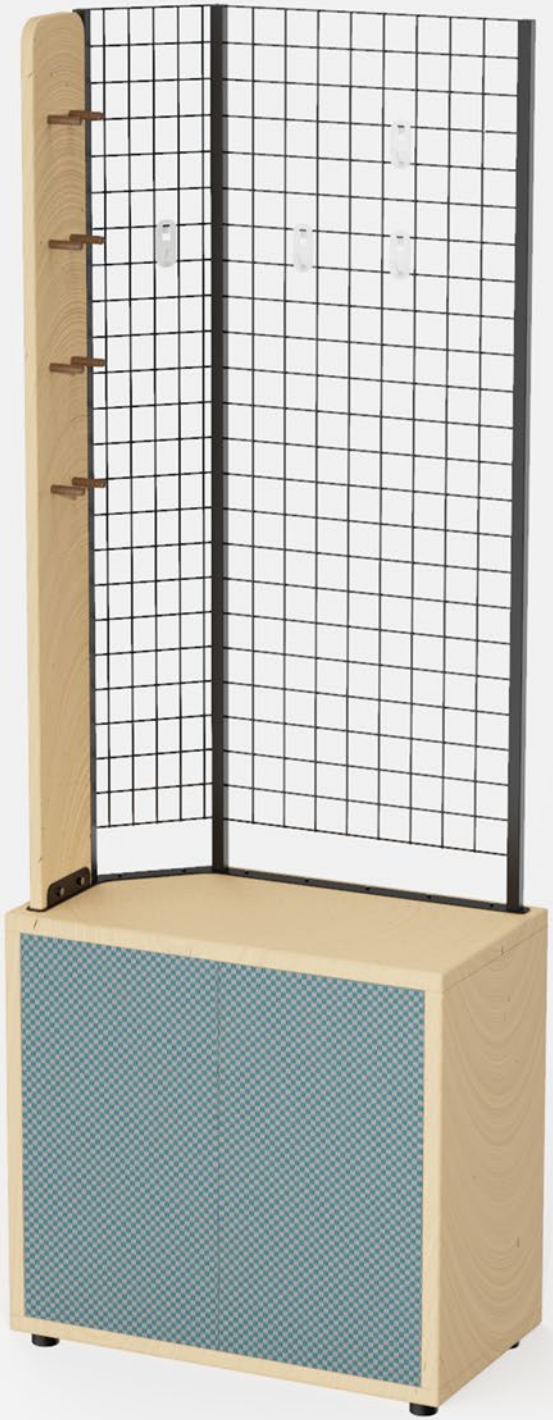

MATERIALS AND DIMENSIONS

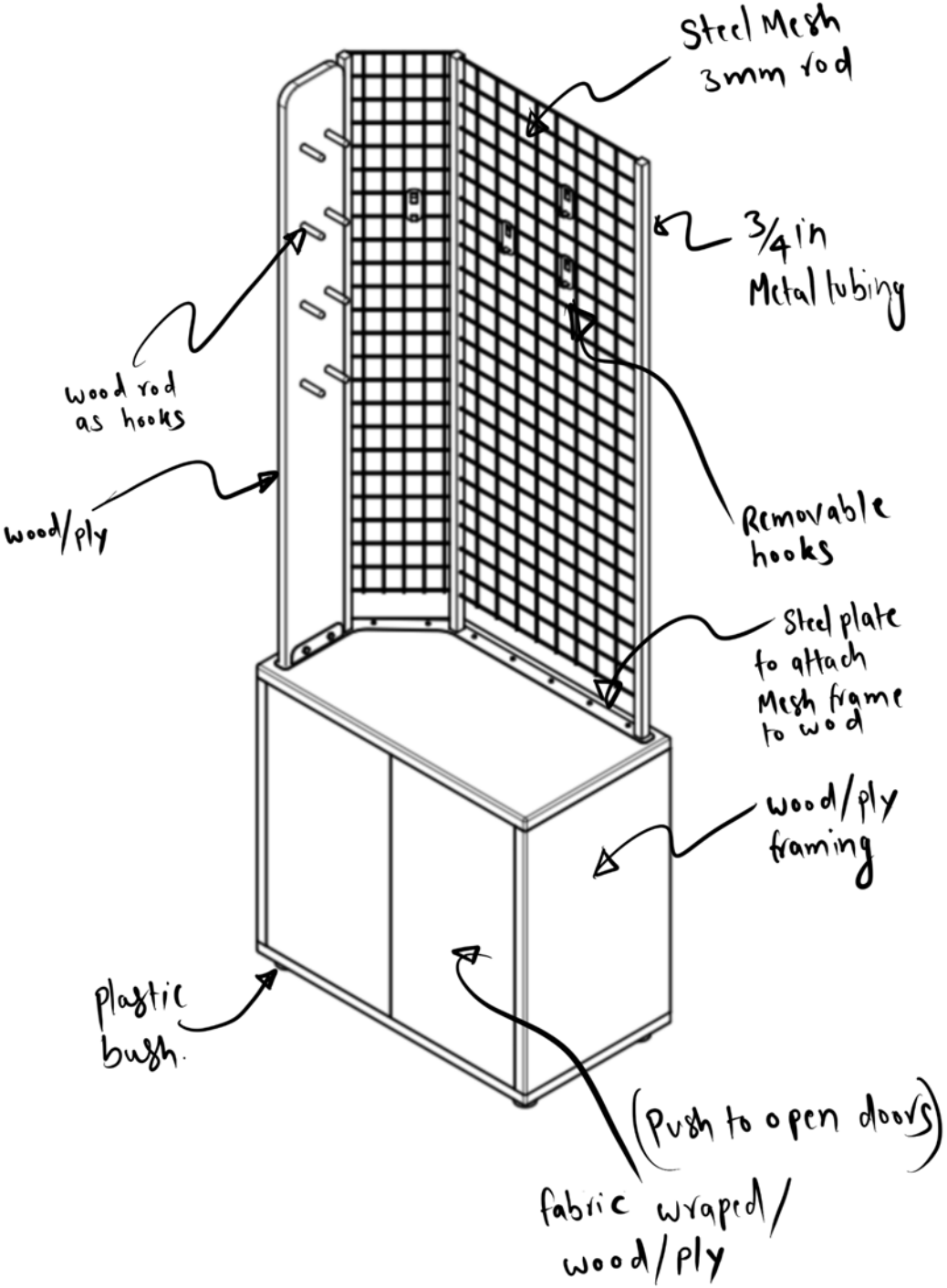

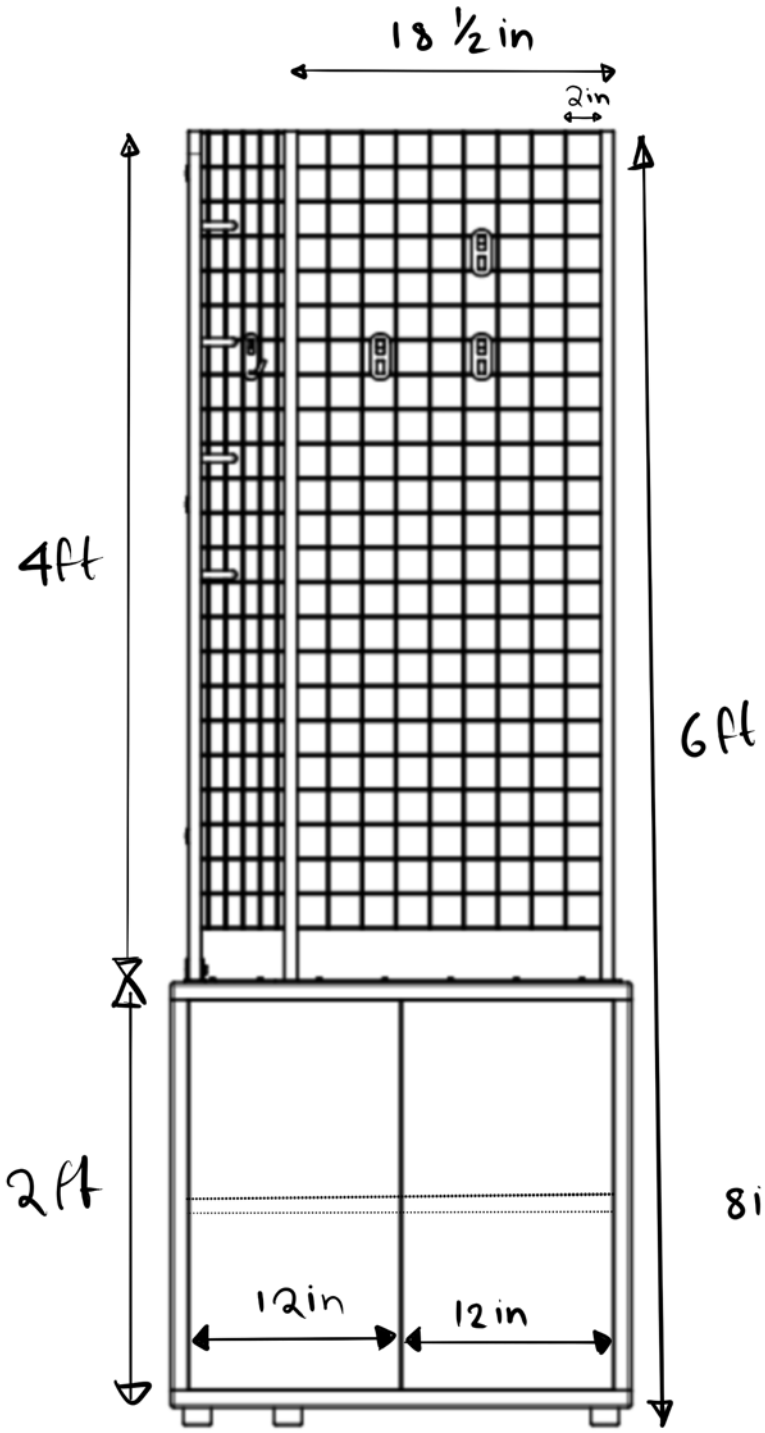
18 ½ in
2in
4ft
6ft
2ft
12in
12 in

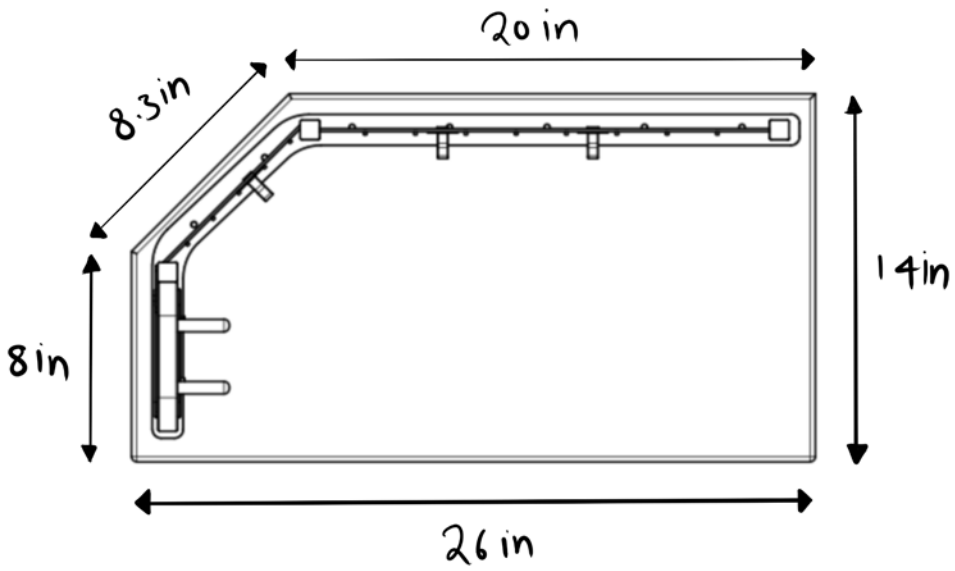
20 in
8.3in
14in
8in
26 in

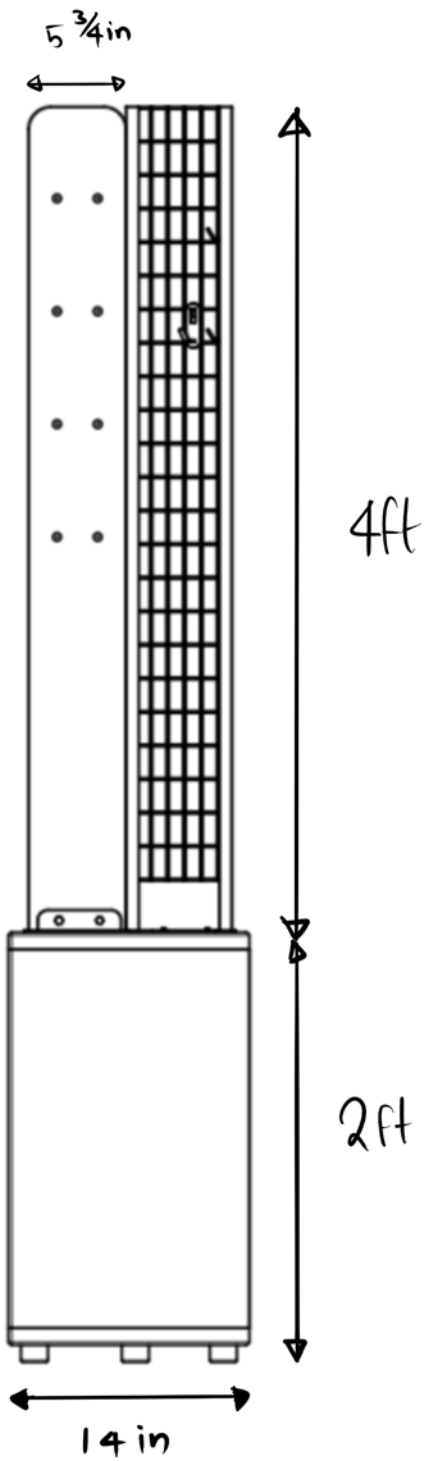
5 ¾in
4ft
2ft
14 in

DIRECTION 2

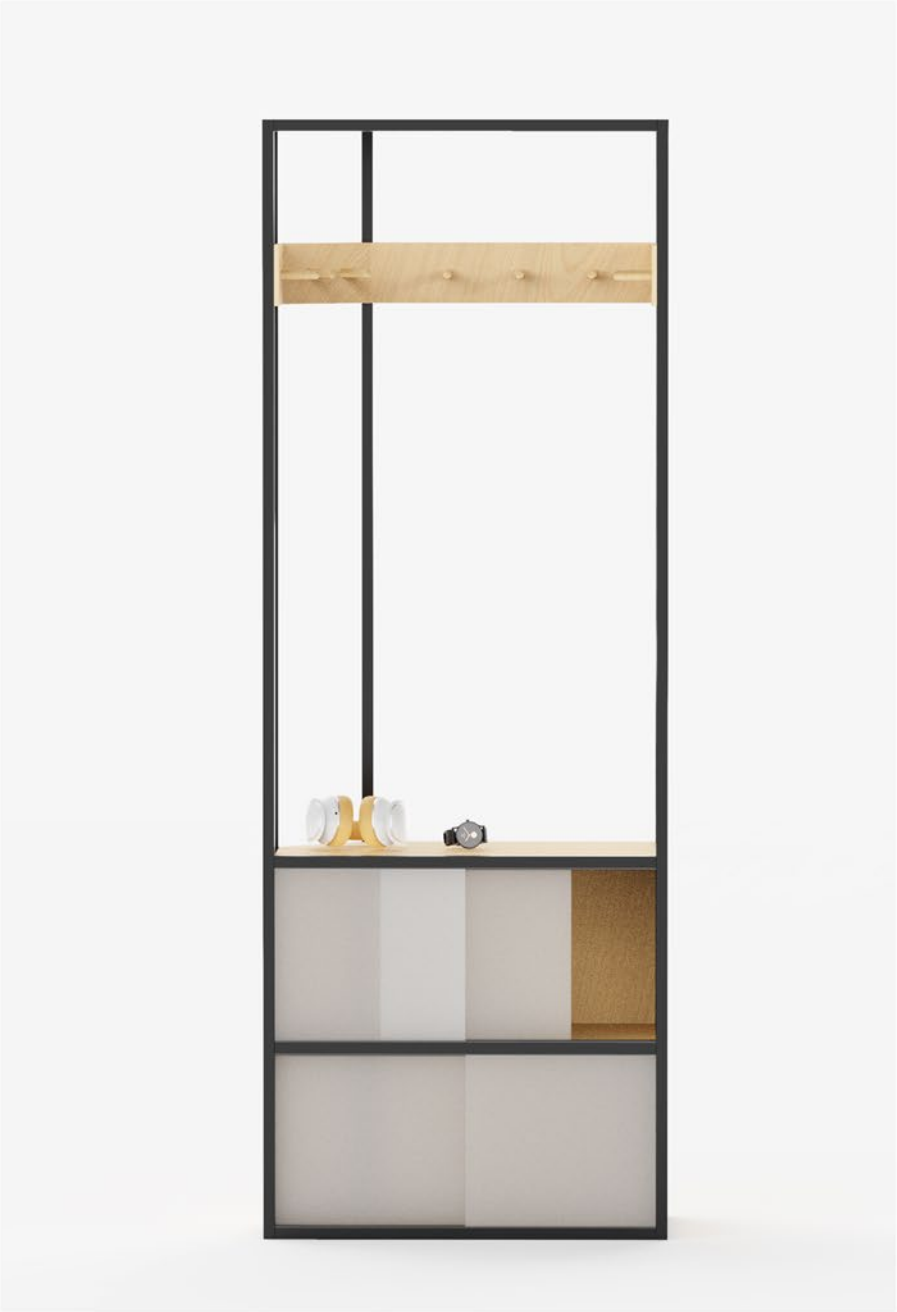

MATERIALS AND DIMENSIONS

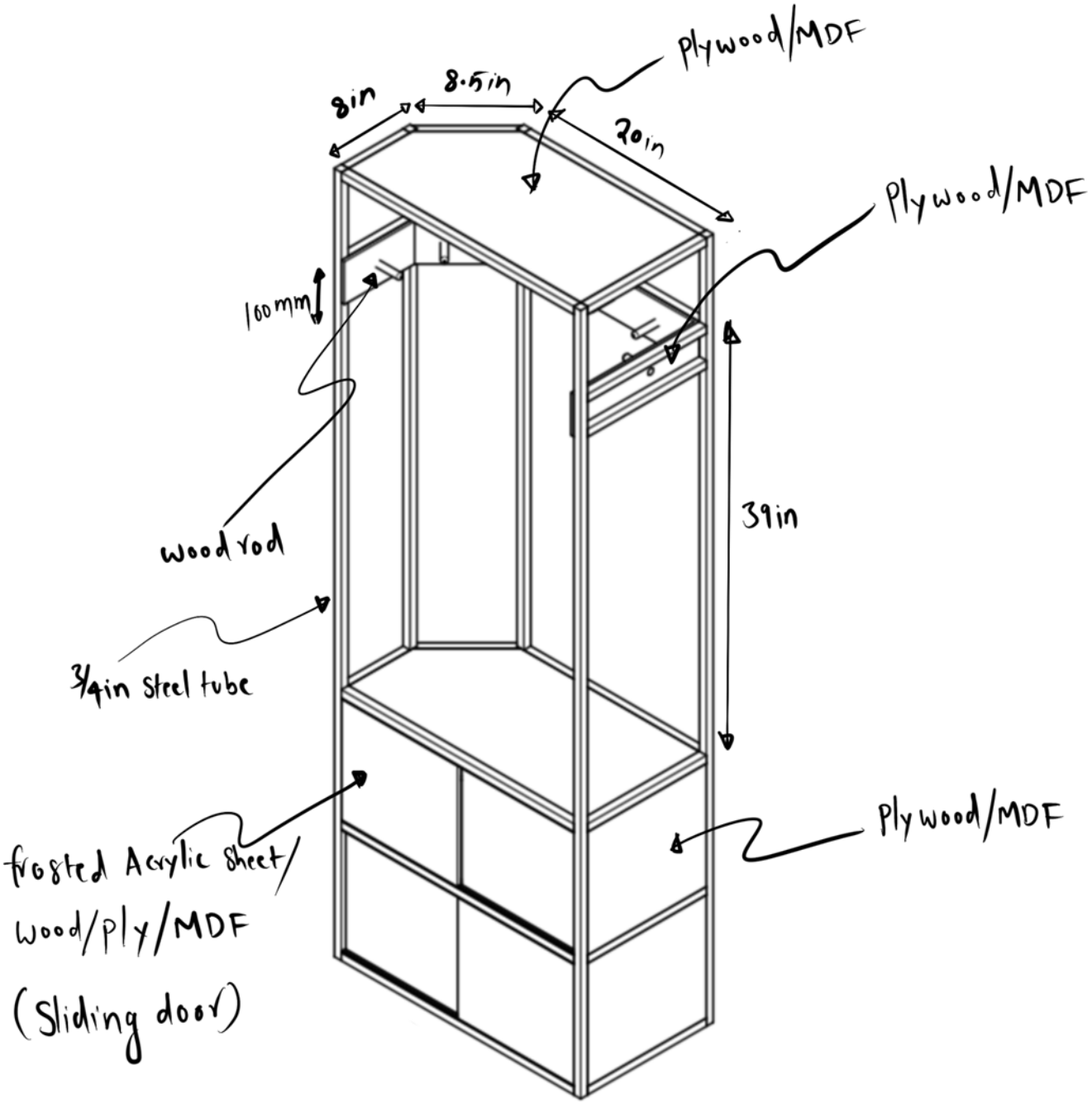

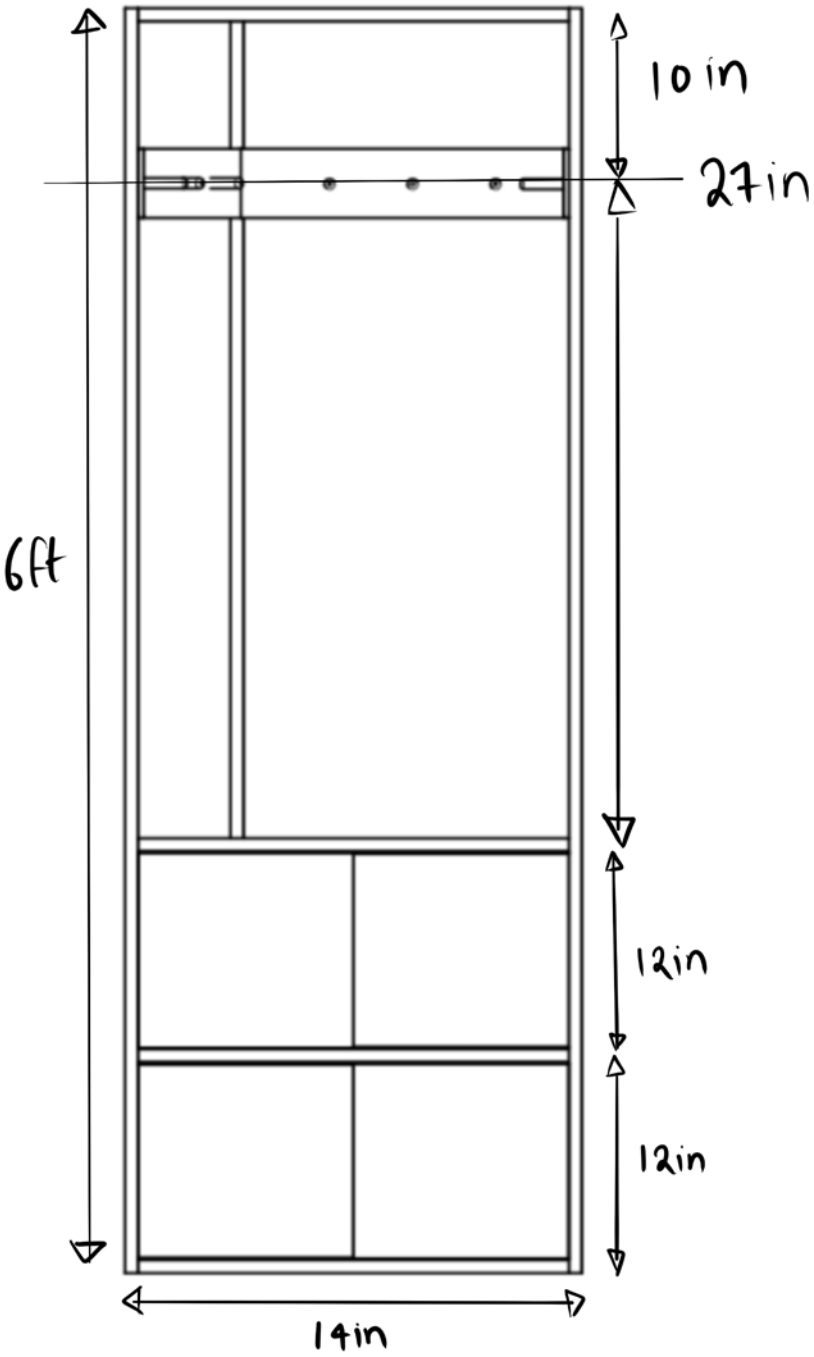
10 in
27 in
6ft
12in
12in
14in

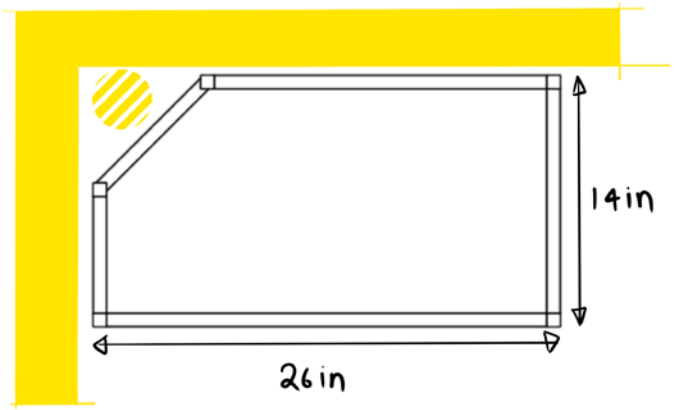
14in
26in

DIRECTION 3

MATERIALS AND DIMENSIONS

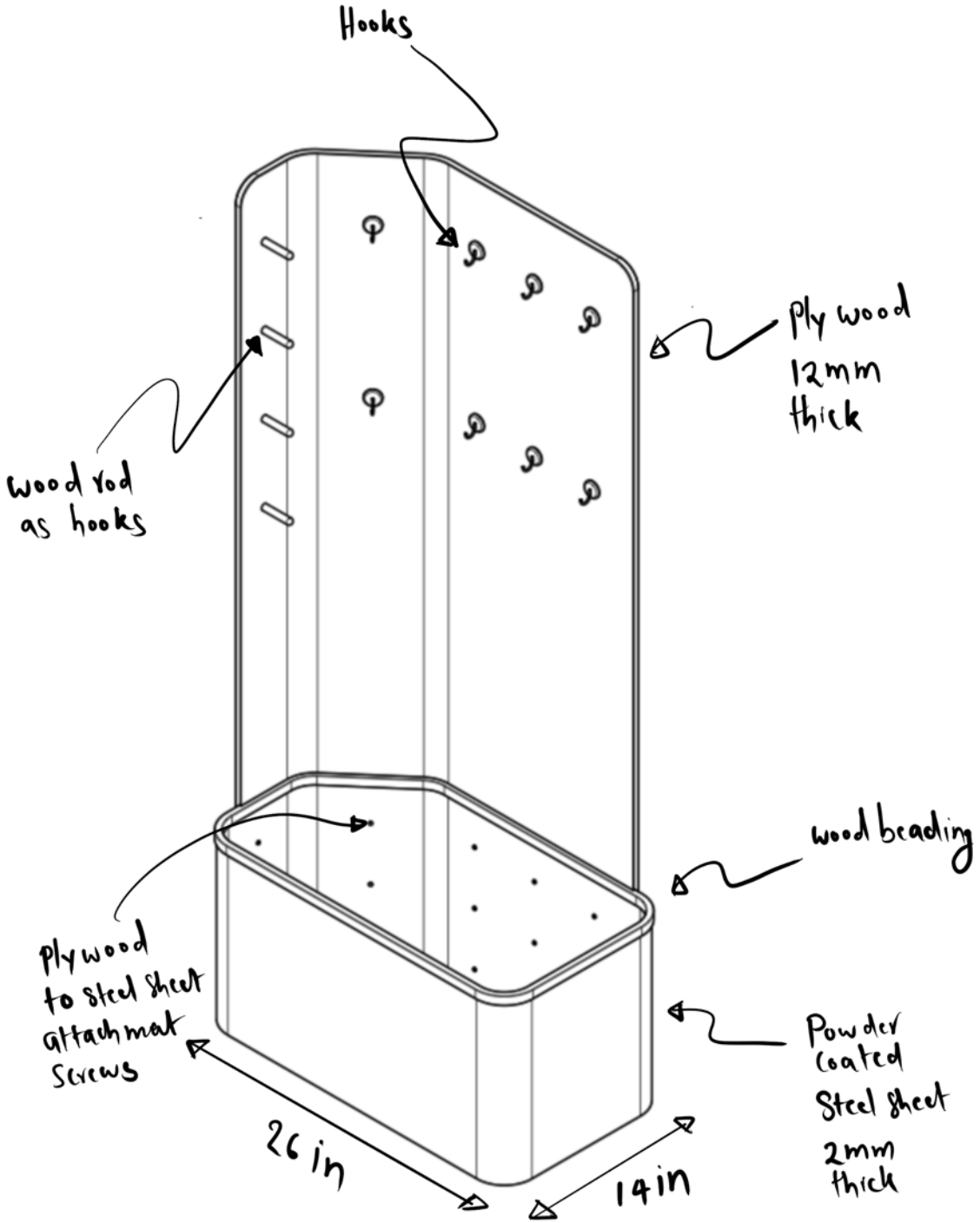

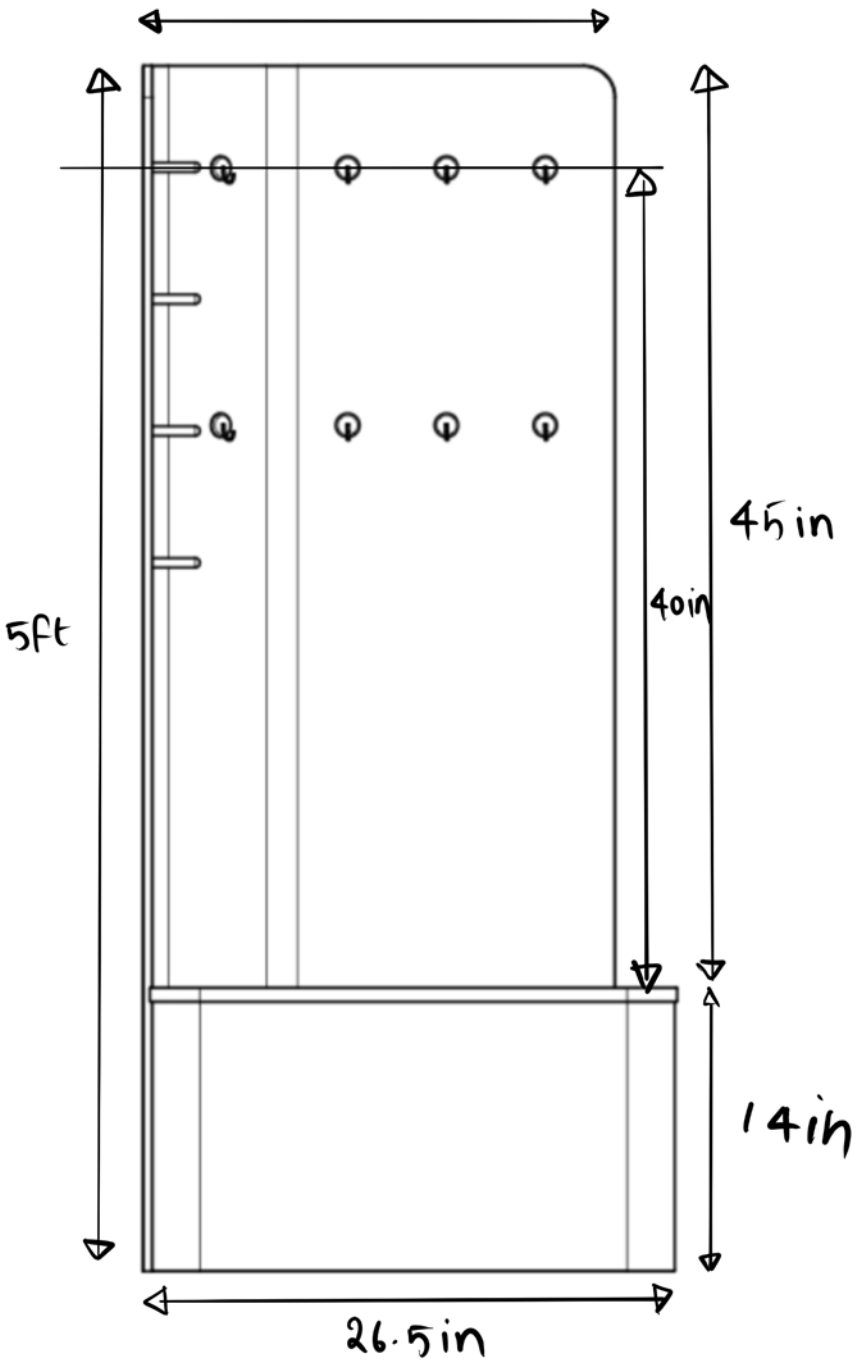
5ft
45in
40in
14in
26.5in

DOOR MECHANISM

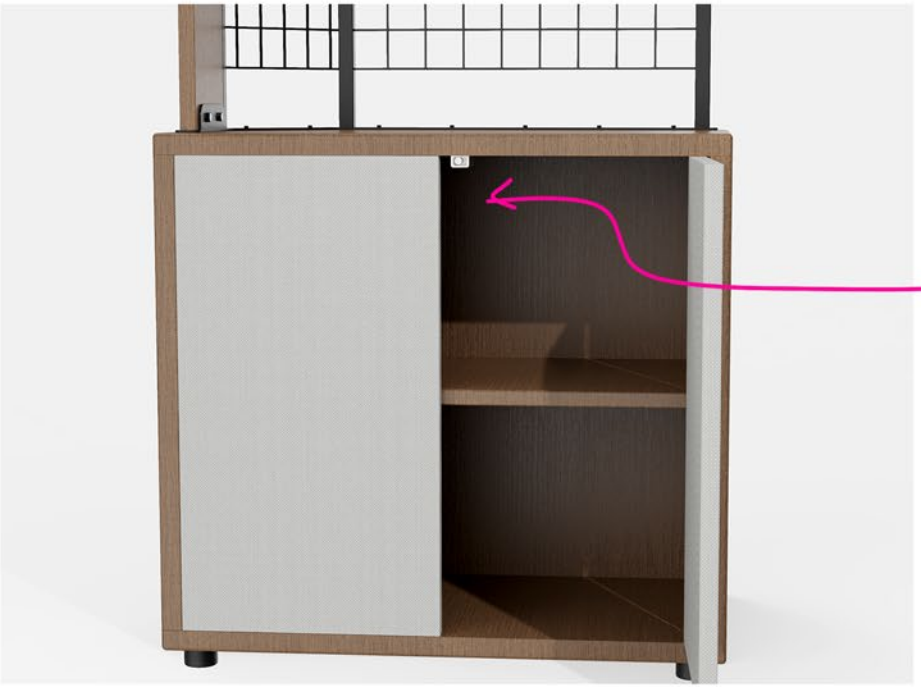

DIRECTION 1

DIRECTION 2

THANK YOU

AWAITING FEEDBACK